

MAG TOOLS

High-Efficiency Filtration Systems

And Chip Conveyors for Modern Manufacturing

Reliable systems that maximize machine performance
and minimize operational downtime.

+91-836-2335990 +91-836-2332297 www.magtoolsindia.com/ info@magtoolsindia.com

What's Inside

1. About Us
2. Why Us
3. Mission & Vision
4. Our Products
5. Magnetic Coolant Filters
6. Coolant Filters
7. Chip Conveyors
8. Rare Eath Magnetic CF
9. Compact Band Filter
10. Chip Conveyors
11. Oil Skimmer
12. Paper Band CF
13. Magnetic Conveyors
14. Hinged Steel Belt Chip Conveyors

About Us

"Established in the year **1995,**
Mag Tools today, is a leading **manufacturer and exporter**
of **machine tool filters** and **conveyors.**"

The Filters and Chip Conveyors have been supplied to both indigenous and imported machines and are also used as original fitment by many machine tool builders. Our company has wide range of standard models to choose from and special/large systems can be designed and supplied as per requirement and applications. We deal in the following products:

- **Magnetic Coolant Filter**
- **Rare Earth Magnetic Separators**
- **Paper Band Filters**
- **Bag Filters**
- **Hydrocyclone Filters**
- **Chip Conveyors**
- **Scraper Conveyors**
- **Magnetic Conveyors**
- **Roller Conveyors**
- **Oil Skimmers**
- **Chilling Units**
- **Mist Collectors**
- **Filter Paper Media**
- **Centralized Coolant Filtration Systems**

These equipments are presently applied in the different industries as:

Engineering & Automobile	Bearings & Spindles	Textile Machinery	Rolling Mills



Why Us

“

Mag Tools is a quality conscious manufacturer who reveres the aspirations and expectations of the customers. Our products go under stringent checks and controls to provide the best quality to the market. Our products boast of quality, efficiency and accuracy. The potential team of our engineers are in line to commitment to the delivery of superior quality products unlike all its rivals.

Mag Tools is committed to customer satisfaction through prompt delivery and ultimate quality. Known for standard and authenticity, the company assiduously strives to maintain the trust among its clients generated through years of superior services.

”



MAG TOOLS

Our Mission

Our mission is to deliver high-quality products and exceptional services while exceeding customer expectations and building long-lasting relationships based on trust and reliability. We focus on innovation and continuous improvement to stay competitive and provide solutions that meet evolving client needs. Committed to ethical and sustainable practices, we aim to positively impact society and the environment while growing alongside our clients and partners.

Our Vision

A company's vision guides its operations and future growth, defining its long-term goals and purpose. A clear vision motivates employees, aligns their efforts, and sets a shared direction for success. It encourages innovation, strategic decision-making, and attracts partners who share the company's values. By providing a roadmap for development, a strong vision helps the company adapt to change, overcome challenges, and thrive in a competitive environment.

Our **Products**

MAGNETIC COOLANT FILTER

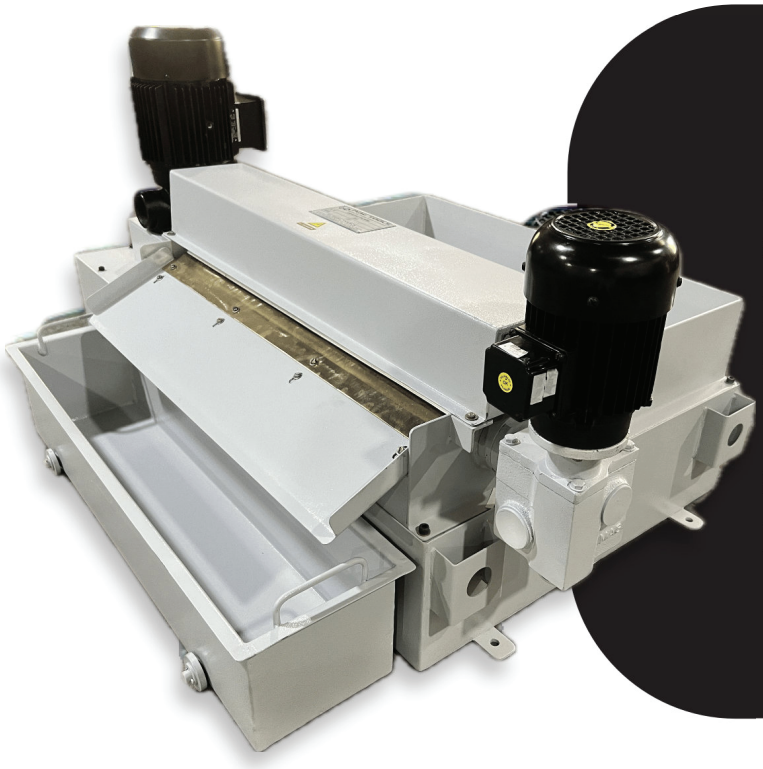

“

A magnetic coolant filter is an essential component in grinding applications, particularly in industries where precision and cleanliness are critical.

Here’s a brief overview of its **purpose** and **benefits:**

PURPOSE

Contaminant Removal: Eliminates ferrous particles to maintain clean coolant.

Coolant Longevity: Extends coolant life and reduces replacement frequency.

Machine Protection: Minimizes wear and prolongs machine lifespan.

BENEFITS

Improved Surface Finish: Ensures higher precision in grinding results.

Cost Efficiency: Lowers maintenance and coolant-related expenses.

Environmental Advantage: Reduces waste by extending coolant usage.

MODEL A.T.P

The magnetic material will not loose its strength even after number of years of use. These filters are available in 30 to 600 liter per minute filtering capacity in a single construction.

GEAR BOX

double worm reduction gearbox is a type of mechanical device used to reduce the speed and increase the torque of an input shaft through a series of worm gears.

WORKING PRINCIPLES

The contaminated coolant from the machine is fed into the inlet of magnetic filter / Magnetic coolant separator. As it passes through the gap between the drum and the body, the dust particles are arrested by the magnetic drum. A synthetic rubber roller mounted on springs, squeezes the dust & allows only dry power, which is further scraped out from the drum by scraper and is collected in the dust collecting tray. The filtration level achieved will be almost 95% for ferrous particles.

FEATURES

Automotive Industry : Used in the manufacturing of engine components and other precision parts.
Aerospace Industry : Essential for producing high-precision parts with stringent quality requirements.
Tool and Die Making : Ensures the production of high-quality tools and dies with excellent surface finishes.

DIMENSIONAL DETAILS FOR MAGNETIC COOLANT FILTER/ MAGNETIC SEPARATOR (MODEL T.A.P)

CAPACITY	A	B	C	MOTOR HP	DRUM RPM	DRUM SIZE
100 LPM	400	200	205	0.25 HP	2.3 RPM	D180X 185L
150 LPM	400	200	280	0.25 HP	2.3 RPM	D180X260L
200 LPM	400	200	380	0.25 HP	2.3 RPM	D180X360L
300 LPM	500	200	480	0.5 HP	2.3 RPM	D180X460L
400 LPM	600	200	580	0.5 HP	2.3 RPM	D180X560L
500 LPM	600	200	680	0.5 HP	2.3 RPM	D180X660L
600 LPM	800	200	780	0.5 HP	2.3 RPM	D180X760L
700 LPM	800	200	880	0.5 HP	2.3 RPM	D180X860L
800 LPM	800	200	980	1 HP	2.3 RPM	D180X960L
900 LPM	800	200	1080	1 HP	2.3 RPM	D180X1060L
1000 LPM	800	200	1180	1 HP	2.3 RPM	D180X1160L
1100 LPM	800	200	1280	1 HP	2.3 RPM	D180X1260L

DIMENSIONAL DETAILS OF SLOTTED TYPE MAGNETIC COOLANT FILTER

CAPACITY	A	B	C	MOTOR HP	DRUM RPM	DRUM SIZE
30 LPM	350	150	150	0.25 HP	2.3 RPM	D150X130L
50 LPM	400	150	205	0.25 HP	2.3 RPM	D150X185L
65 LPM	400	150	280	0.25 HP	2.3 RPM	D150X260L
100 LPM	400	150	380	0.25 HP	2.3 RPM	D150X360L
150 LPM	700	150	480	0.25 HP	2.3 RPM	D150X460L
200 LPM	700	150	580	0.5 HP	2.3 RPM	D150X560L
300 LPM	700	200	680	0.5 HP	2.3 RPM	D150X660L
400 LPM	700	200	780	0.5 HP	2.3 RPM	D150X760L
500 LPM	800	200	880	0.5 HP	2.3 RPM	D150X860L
600 LPM	800	200	980	1 HP	2.3 RPM	D150X960L

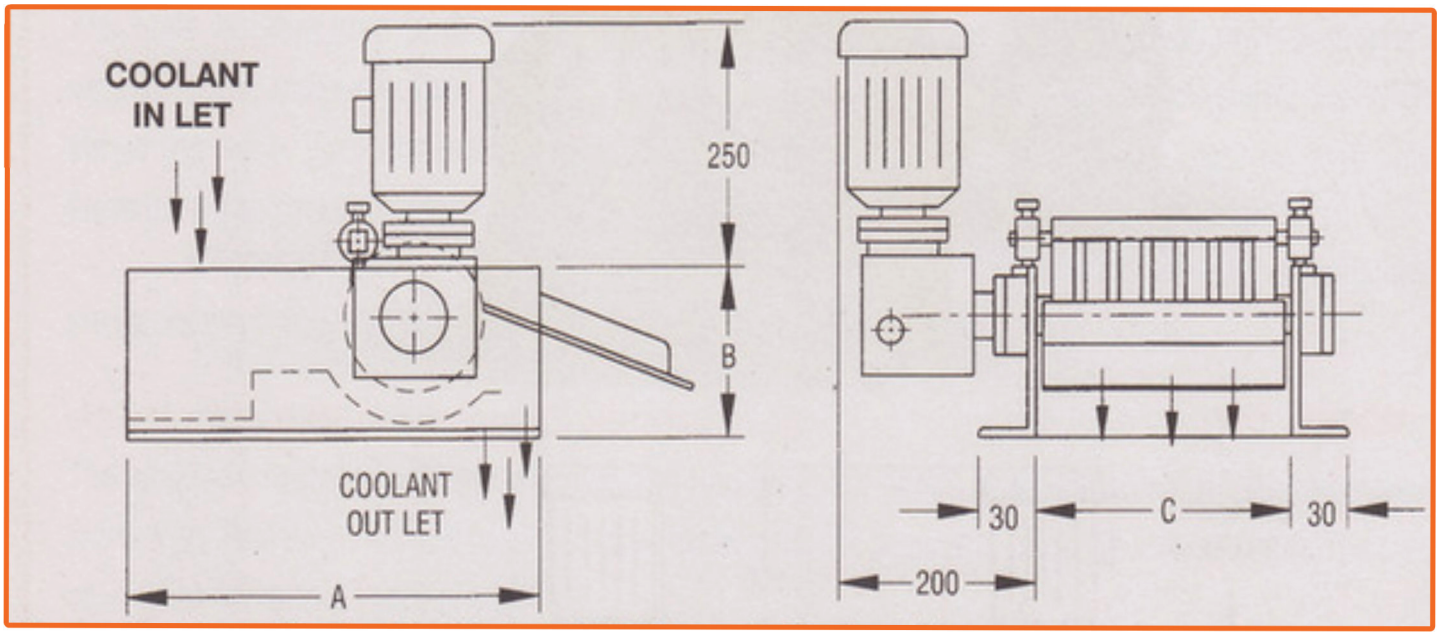

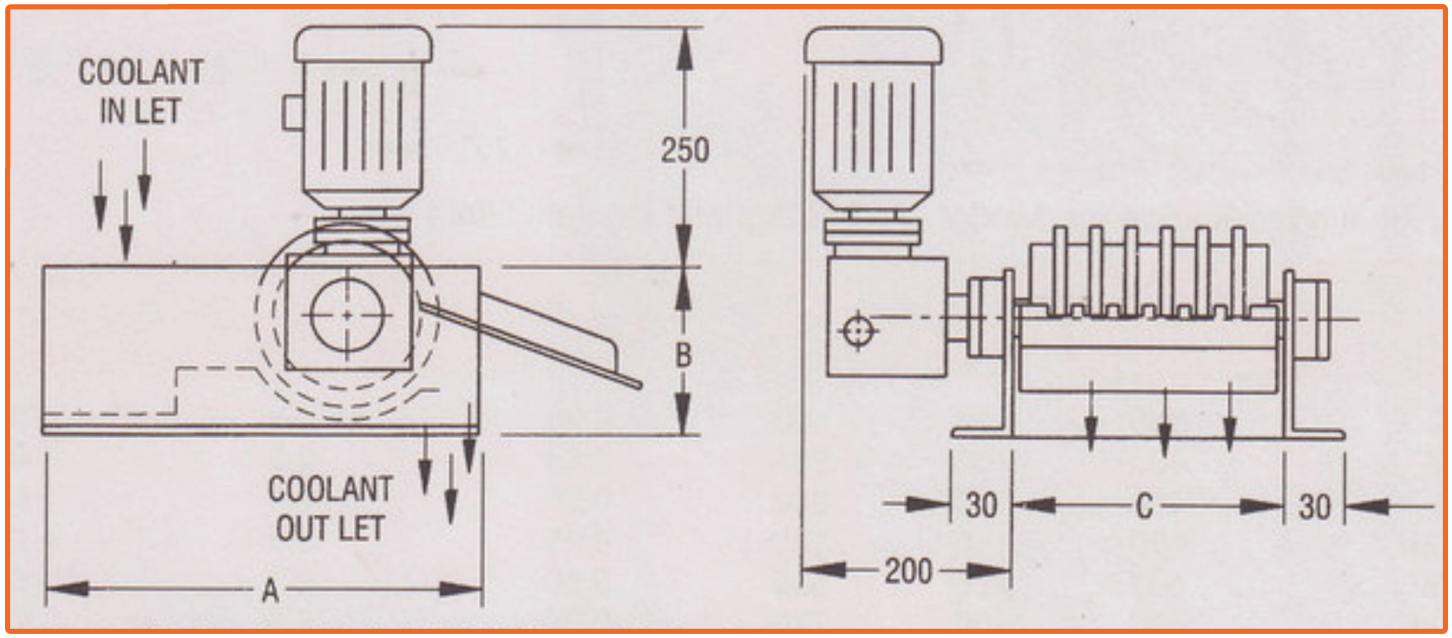

Model Tap (Slotted Drum)

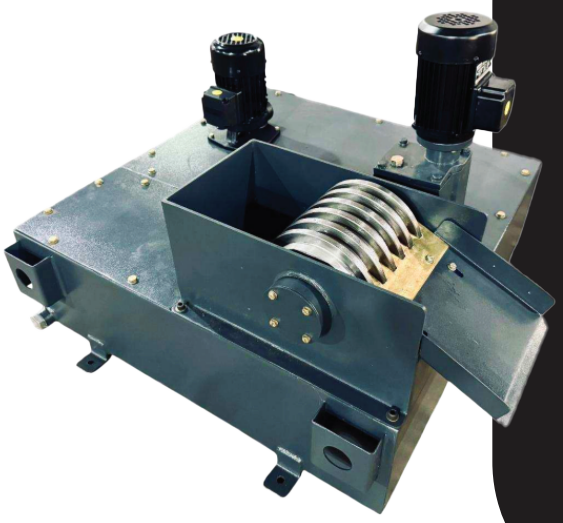

Slotted drum type magnetic coolant filters operate through a carefully engineered combination of magnetic force and mechanical filtration. The rotating drum, equipped with high- strength magnets, attracts and cap tures ferrous particles suspended in the coolant. The slotted design allows coolant to flow freely while trapping contaminants on the drum's surface. As the drum rotates, accumulated particles are continuously scraped off into acollection chamber, ensuring uninterrupted filtration. This mechanism not only enhances the removal efficiency of fine metallic debris but also reduces the risk of clogging, thereby maintaining steady coolant flow and safeguarding machinery components. Understanding this operational principle is essential for optimizing filter per formance and extending equipment life.

- **Slotted drum type magnetic coolant filters** are widely utilized across various manufacturing sectors.
- **In automotive machining,** they effectively remove metal shavings and debris from cutting fluids, ensuring precision and tool longevity.
- **In aerospace component production,** these filters maintain coolant purity critical for high-tolerance parts.
- **General metalworking operations** such as milling, grinding, and turning, where consistent coolant quality directly impacts surface finish and machine performance. Their adaptability also extends to heavy-duty industries including shipbuilding and defense manufacturing. By safeguarding equipment and optimizing coolant management, these filters support operational efficiency and quality control across diverse industrial applications.

FILTER CHIP CONVEYOR

The **drum lter conveyor** is a highly e cient industrial solution that integrates solid-liquid separation and material transport into a single, continuous operation. By utilizing a rotating drum equipped with a specialized ltration medium and an internal vacuum or pressure system, it efectively separates liquids from slurry while simultaneously conveying the captured solids to a discharge point. This dual-functionality signi cantly boosts productivity by reducing manual labor and operational downtime. Beyond efeciency, these conveyors o er a closed system design that enhances workplace safety by containing dust and contaminants. The result is a versatile, cost-efective system that ensures consistent dewatering and high-quality output across various industrial applications.



FEATURES

- Removes floating and suspended chips as easily as chips and fines.
- Self-clearing filter eliminates problems of clogging.
- Improves part quality by improving coolant quality.
- Prolongs coolant life.
- Continues trouble free operation.

AN EFFICIENT SOLUTION FOR POSITIVE SEPARATION

The new aluminum chip conveyor cum drum filters is the only conveyor available that can receive flowing coolant loaded with aluminum turnings, capture those Turnings inside, and then allow only clean coolant to exit. It is available for use With a single machine tool, or as part of a central integrated coolant cleaning System.

HOW IT OPERATES

The Dirty Tank Coolant Inlet is the first area to receive chips, turnings, fines and coolant from the machine tool. There, large chips settle to the bottom where they are removed by a drag Conveyor. All coolant must then pass through a series of drum filters. There A SS Drum screen, scraped, captures smaller chips and lighter weight chips Away by a scraping plate or flushed by back wash arrangement and then remove by the drag conveyor. The separated coolant exits through the inside of the Drum filter to a clean coolant exit.

RARE EARTH MAGNETIC COOLANT FILTER

”

MAG TOOL'S Magnetic Coolant Filter are designed for filtering coolant oils contaminated with ferrous materials. These equipments are light weight, compact design, and can be easily installed.

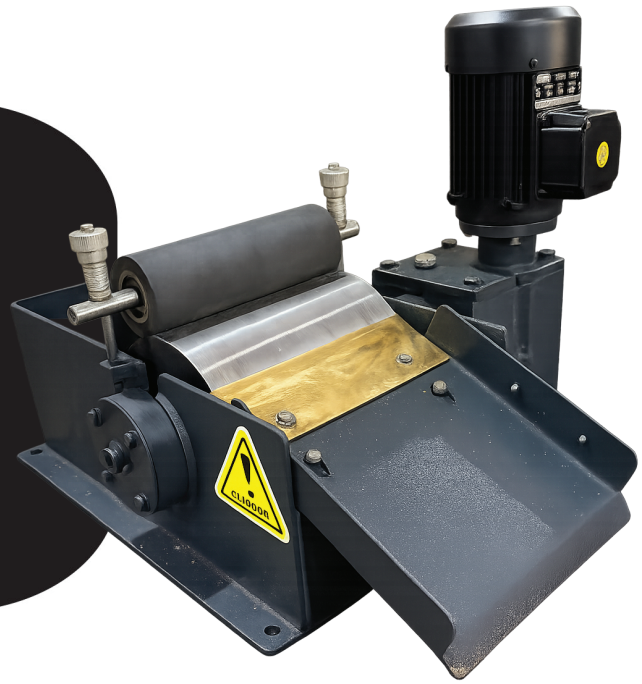

MODEL R.E.M.F

The magnetic drum is made out of powerful rare earth magnets which produce magnetic field **75mm** above the drum. Very fine particles will be arrested without a slip. The magnetic material will not loose its strength even after number of years of use.

GEAR BOX

The drive of the drum is achived by double reduction worm and worm wheel. The worms are made in high carbon steel, hardned and ground which run on sealed ball bearings.

WORKING PRINCIPLES

The contaminated coolant from the machine is fed into the inlet of the magnetic filter. As it passes thru the gap between the drum and the body, The dust particles are arrested by the drum. A synthetic rubber roller is mounted on springs, squeezes the dust and allows only dry powder, Which is further scraped out from the drum by scraper and is collected in the dust collecting tray. The level of filtration will be almost **95 %** for ferrous particles.

APPLICATION

These filters can be used with all types of grinding machines such as cylindrical, Centerless, Internal, Surface, Double disc and roll grinding machines. These can also be used for filtered honing oil of honing machines, EDM's, Washing machines.

FEATURES

- Removes floating and suspended chips as easily as chips and fines.
- Self-clearing filter eliminates problems of clogging.
- Improves part quality by improving coolant quality.
- Prolongs coolant life.
- Continues trouble free operation.

COMPACT BAND FILTER

”

Fully automated compact band coolant filters are easy to operate and provides cost effective solution for filtration. These systems are specially designed for space efficiency and require only 20% of the space as compared to other conventional paper band filters. The hydrostatic head and the perfect sealing of the machine ensure that there is no leakage or overflow of the material and high filtration efficiency is achieved. Engineered to precision, these coolant filters are well suited for high flow rate and dirt content.



- Paper cartridge, washable cartridge, and stack type filter elements are available.
- System used to achieve final filtration level. Range: 30 LPM to 1500 LPM in one module.
- Suitable to max, working pressure 30 bar & pressure drop 0f 3 bar across filter.

MAG TOOLS presents its Compact Band Coolant Filters, engineered to deliver efficient and reliable filtration in a space-saving design. Featuring a compact footprint, they integrate seamlessly into tight machine environments without compromising filtration capacity. Ideal for industrial applications requiring consistent coolant maintenance, Mag Tools' compact band filters ensure superior contaminant removal, reducing downtime and maintenance costs. Trust Mag Tools for durable, high-performance coolant filtration solutions designed to keep your operations running smoothly.

Clarity level : 75 microns to 3 microns.

CHIP CONVEYOR



MAG TOOLS Hinged steel belt chip conveyors are been specially designed keeping in mind the hazards that are normally encountered with conventional chips and swarf Conveyors, The Hinged steel belt chip conveyor is pressed in extra heavy duty sheet and perfect guiding of rollers ensures minimum friction and noise free operation. The body is compact in size occupies small space but due to extra chip space can handle large volume of chips.

The pitch of the hinged steel belt is **4" 2.5 ", 1.5** and **1.2 "**, width varies from **6 inch** to **24 inchs** depending upon the volume of chips to be handled. Available in various configurations straight or inclined from **15 degree** to **75 degrees**. Variable or fixed speed drives as per requirement can be supplied. A safety clutch arrangement with adjustable torque limiter prevents damage to metal belt and the drive, in case of jamming.

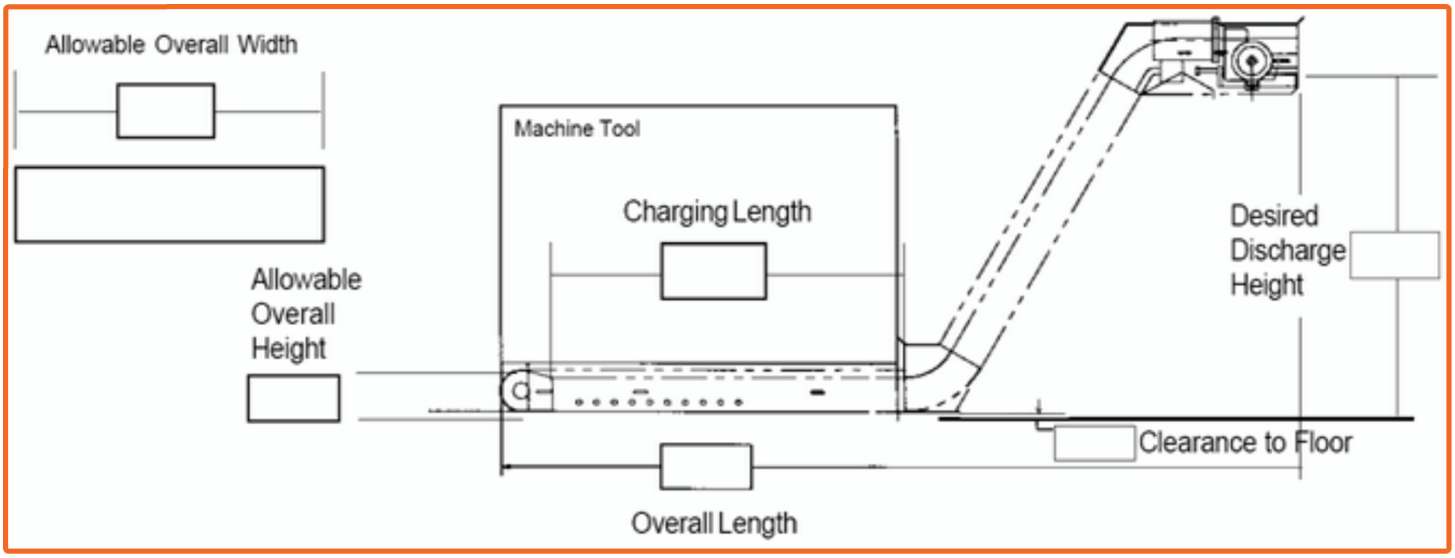

OIL SKIMMER

”

A simple and effective way to clean water soluble coolant from floating tramp oil. Disc type oil skimmers, drum type magnetic oil skimmers.

MAG TOOLS now has available small, cost effective oil skimmers for removing tramp oil from machine tool coolant tank. The MAG TOOLS wheel skimmer (WS) effectively removes floating tramp oil from water soluble coolants. In its magnetic version (MWS) it will even remove dispersed ferrous particles from the coolant.

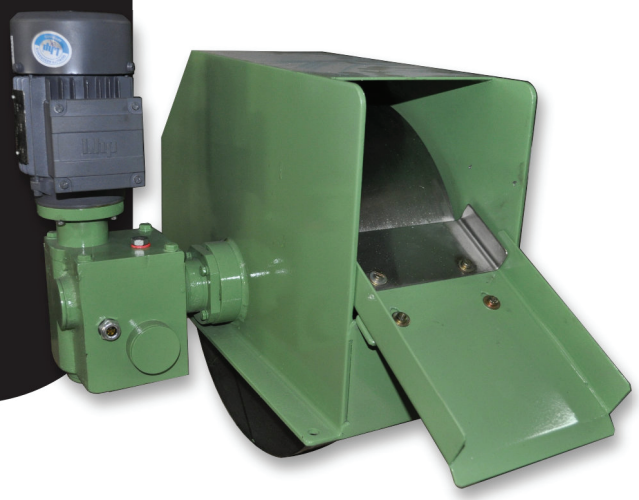

Key Features:

1

Robust Construction:

Made with corrosion-resistant materials to withstand harsh industrial environments.

2

Efficient Oil Recovery:

Advanced skimming mechanism ensures rapid and continuous removal of oil layers from liquid surfaces.

3

Easy Installation & Maintenance:

User-friendly design allows for quick setup and straightforward cleaning.

4

Versatile Application:

Suitable for a wide range of industries including automotive,

5

Energy Efficient:

Low power consumption design reduces operational costs without

6

Compact Design:

Space-saving build fits seamlessly into existing systems.

APPLICATION

- Removal of oil from coolant tanks and sumps
- Treatment of wastewater and stormwater
- Environmental spill response
- Industrial process fluid cleaning

THE ADVANTAGES OF MAG TOOLS WHEEL SKIMMER

- Low cost tramp oil removal for single machine application.
- Improves coolant performance. Improves coolant life.
- Simple design, few moving parts, low wear, very little maintenance required.
- Easy to install or retro-fit. Removes ferrous fines (M option) from the coolant.

PAPER BAND COOLANT FILTRATION SYSTEM

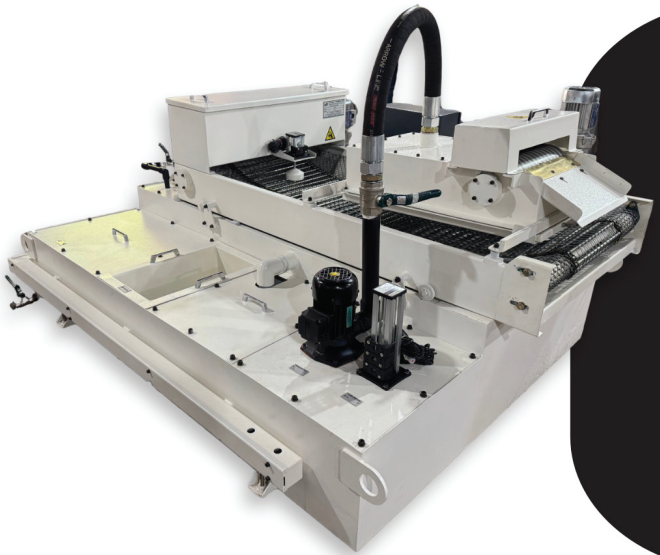

“

MAG TOOLS presents the Paper Band Coolant Filtration System, an efficient and reliable solution designed to enhance the performance and longevity of your machining operations. This innovative filtration system utilizes high-quality paper band filters to effectively remove contaminants and ensure clean coolant circulation.

Importance of Coolant Filters in Grinding Machines:

Contaminant Removal: These filters effectively remove metal particles, dirt, and other impurities from the coolant, preventing them from causing damage to the grinding machine.

Enhanced Surface Finish: Clean coolant helps in achieving a superior surface finish on the workpiece by reducing the risk of scratches and imperfections.

Extended Tool Life: By keeping the coolant clean, these filters help in extending the life of grinding wheels and other tools, reducing the need for frequent replacements.

Improved Machine Efficiency: Clean coolant ensures that the machine operates at optimal efficiency, reducing energy consumption and operational costs.

Benefits:

- **Environmental Impact:** By promoting the recycling of coolant, these filters contribute to environmental sustainability.
- **Cost Savings:** Regular use of paper band coolant filters reduces maintenance costs and extends the life of both the machine and the coolant.

Key Features:

- **Efficient Filtration:** They effectively remove contaminants and particles from liquids, ensuring the longevity and performance of machinery.
- **Cost-Effective:** These filters are economical, providing a balance between cost and performance.
- **Easy Maintenance:** Designed for easy replacement and maintenance, minimizing downtime in industrial operations.
- **Versatile Applications:** Suitable for a wide range of industrial applications, including grinding, honing, and other machining processes.

APPLICATIONS:

- SURFACE GRINDING MACHINES
- CYLINDRICAL GRINDING MACHINES
- CENTRELESS GRINDING MACHINES
- INTERNAL GRINDER
- TRANSFER LINES
- MACHINING CENTRES

OPERATION:

The contaminated coolant is first passed through the magnetic coolant filter which separates almost about 95% of the grinding dust ferrous particles. The liquid is then further passes thru the filter paper media where all the ferrous and non ferrous particles like grinding grit, stainless steel dust, brass and aluminum sludges are filtered by our coolant filtration system. As the porosity of the filter paper media gets clogged up due to the accumulation the dust from the grinding machine the limit switch triggersthe paper band filter geared motor to activate and pull the fresh filter paper media ahead automatically. Now the liquid passes thru the coolant filter paper roll which in turn gives out a signal to the limit switch to shut off the geared motor of paper band coolant filter.

DOUBLE WORM REDUCTION GEARED MOTOR:

The drive of the drum is achieved by double reduction worm and worm wheel. The worms are made in high carbon steel, hardened and ground which run on sealed ball bearings. The worm wheels are made in high wear resistance materials. An oil indicator is provided to ensure the level of oil in the gear box. This box is designed for continues and trouble free running for years.

(MODEL PBF- PBMF)

MODEL	CAPACITY	CUTTING OIL	EMULSION	L	LT	W	WP	TANK CAP
PBMF/PBF	50 LPM	35 LPM	50 LPM	1100MM	1300MM	550MM	450MM(W)	150 LITERS
PBMF/PBF	65 LPM	45 LPM	65 LPM	1200MM	1400MM	800MM	700MM(W)	250 LITERS
PBMF/PBF	100 LPM	65 LPM	100 LPM	1600MM	1800MM	800MM	700MM(W)	330 LITERS
PBMF/PBF	150 LPM	100 LPM	150 LPM	1600MM	1800MM	1000MM	900MM(W)	410 LITERS
PBMF/PBF	200 LPM	130 LPM	200 LPM	2000MM	2200MM	1000MM	900MM(W)	500 LITERS
PBMF/PBF	300 LPM	200 LPM	300 LPM	2400MM	2600MM	1000MM	900MM(W)	600 LITERS
PBMF/PBF	400 LPM	250 LPM	400 LPM	2900MM	3200MM	1000MM	900MM(W)	735 LITERS
PBMF/PBF	500 LPM	300 LPM	500 LPM	3200MM	3500MM	1000MM	900MM(W)	800 LITERS
PBMF/PBF	600 LPM	350 LPM	600 LPM	2700MM	3000MM	1200MM	1100MM(W)	1080 LITERS
PBMF/PBF	700 LPM	400 LPM	700 LPM	3000MM	3300MM	1200MM	1100MM(W)	1200 LITERS
PBMF/PBF	800 LPM	450 LPM	800 LPM	3000MM	3300MM	1400MM	1300MM(W)	1400 LITERS
PBMF/PBF	900 LPM	500 LPM	900 LPM	3200MM	3500MM	1400MM	1300MM(W)	1470 LITERS
PBMF/PBF	1000 LPM	600 LPM	1000 LPM	3200MM	3600MM	1500MM	1400MM(W)	1620 LITERS

DIMENSIONAL DETAILS OF SLOTTED TYPE MAGNETIC COOLANT FILTER

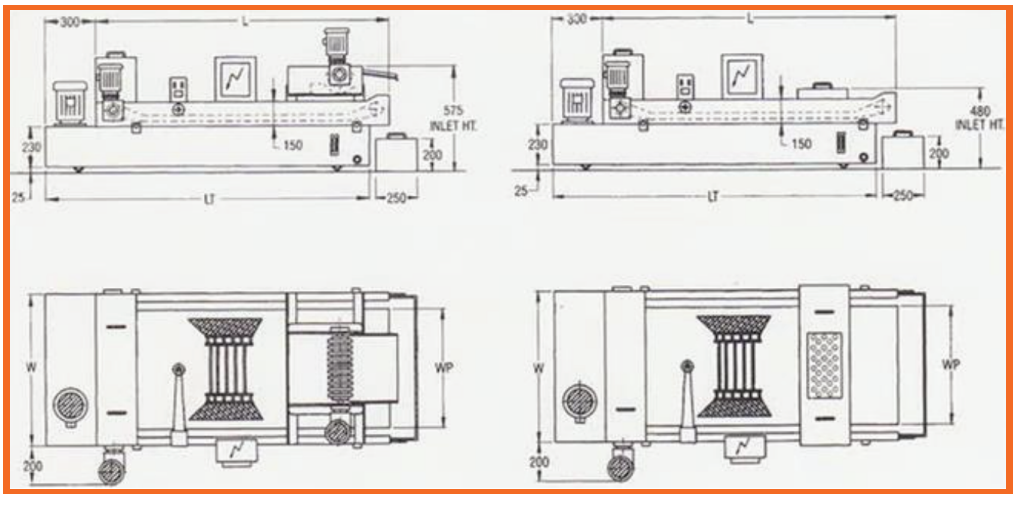

MAGNETIC CONVEYOR

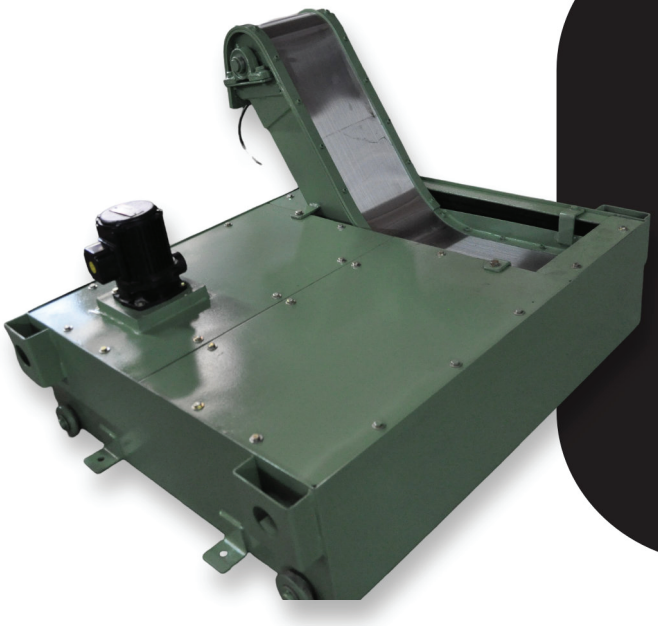

“

FINE – Light and sharp chips generated from gear shaves, Gear Hobbing machines, Spline cutting machines, SPM’s deep hole drilling machines, broaching machines, Press shops and Heat treatment shops coming with large amount of coolant tend to escape with the coolant and cause damage to the pump and effects surface finish.

Plain sheet magnetic conveyor help attract ferrous chips from coolant & separates coolant from chips. Thus the coolant is free from chips and the conveyor acts as magnetic filter for the coolant. The moving permanent magnets mounted on endless chain underneath the stationary stainless steel sheet attracts ferrous chips and slide them on to the plate to the discharge end. The coolant separated from chips flows to the coolant tank through an over flow so that even floating chips get attracted by moving magnets and get conveyed. MAG TOOLS Magnetic plain sheet type conveyors being sleek in construction can be introduced in to small cross sectional openings in machine tools. Since Conveyors are custom built, different configuration and profiles can be made to suit specific applications.

As a leading provider of magnetic conveyors, Mag Tools specializes in designing and manufacturing high-quality systems that efficiently and effectively move ferrous materials within industrial settings. Our magnetic conveyors are expertly engineered to provide reliable transportation of metal parts, scrap, and other magnetic materials with precision and minimal downtime.

Utilizing powerful, permanent magnets, our conveyors are capable of securely holding and transporting materials along designated paths, reducing the risk of material spillage and ensuring a smooth and efficient workflow. With customizable options available to meet the specific needs of our customers, Mag Tools magnetic conveyors are ideal for a wide range of industries, including manufacturing, recycling, and material handling.

SCRAPER CONVEYORS (DRAG CONVEYOR)

”

It has been specially designed keeping in mind the hazards that are normally encountered with conventional chips and swarf Conveyors. The hinged steel belt is pressed in extra heavy duty sheet and perfect guiding of rollers ensures minimum friction and noise free operation. The body compact in size occupies small space but due to extra chip of space can handle large volume chips.

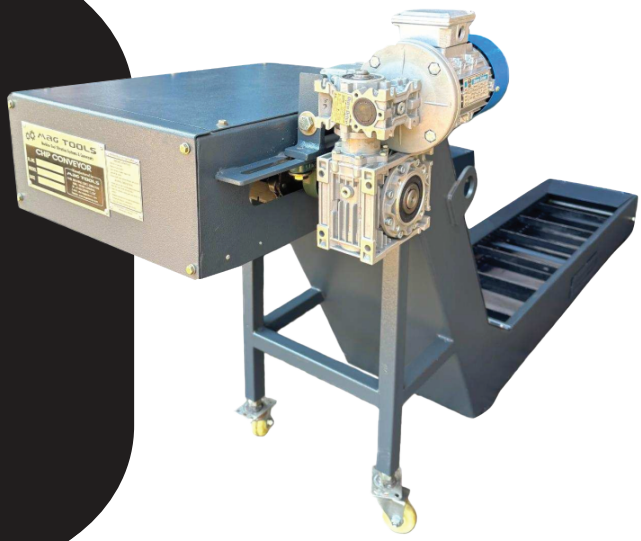

Mag tools scraper conveyors are suitable for handling short powdered chips and sludges from the coolant efectvely from high chips producing machines like SPMs etc.. Available in width 50 mm to 1500 mm width. Safety tripping arrangement is a standard features.

Key Features:

1. Sturdy Constructon: Our conveyor is constructed using high-quality materials that ensure durability and long-lastng performance, even in demanding industrial environments.

2. Scraper Belt: The scraper belt is equipped with M.S Nats that attract and collect chips and partcles, ensuring etective removal and preventng them from contaminatng the coolant or damaging the machinery.

3. Precision Alignment System: Our scraper type chip conveyor includes a precision alignment system that ensures the belt stays in optimal alignment during operation. This minimizes the risk of belt damage or misalignment that could disrupt the conveyor's performance.

4. User-Friendly Design: We have designed our scraper type chip conveyor with user convenience in mind. It features a user-friendly control panel that allows for easy operation and adjustment of various parameters. Additionally, the conveyor is equipped with safety features to ensure the well-being of the operators.

5. Easy Maintenance: The conveyor's design facilitates easy maintenance and cleaning. It includes quickrelease mechanisms for the belt, allowing for easy access and removal of accumulated chips and debris. This ensures minimal downtme and maximizes productivity.

6. Customizable Options: We understand that dīerent machining operations have unique requirements. Therefore, our scraper type chip conveyor can be customized to meet your speciļc needs. Whether it's the length, width, or additional features, we can tailor the conveyor to deliver optimal performance in your working environment.Choose the Mag Tools scraper type chip conveyor for a reliable, eĸcient, and customizable solution to your chip removal needs. We are committed to providing high-quality products and exceptional customer service to meet and exceed your expectations.

FILTER PAPER MEDIA



"

Mag Tools filter paper rolls are designed for high-quality filtration applications across various industries. Manufactured using premium-grade materials, these filter paper rolls offer excellent retention capabilities, consistent porosity, and superior chemical resistance. Ideal for laboratory, industrial, and environmental testing needs, Mag Tools filter paper rolls provide reliable performance for separating solids from liquids, sample preparation, and analytical processes.

Key Features:

- Consistent filtration effciency with uniform particle retention
- Available in multiple grades and pore sizes to suit diverse applications
- Resistant to acids, bases, and solvents, ensuring durability and extended usability
- Easy-to-cut rolls for customized sizing and minimal waste
- Smooth texture for perfect filtration without clogging or tearing

Applications :

- Laboratory filtration and sample analysis
- Environmental water and air quality testing
- Industrial process filtration
- Food and beverage quality control

Choose Mag Tools filter paper rolls for precision filtration solutions that enhance the quality and reliability of your testing and processing workflows.

CENTRALIZED COOLANT FILTRATION SYSTEMS

Centralized coolant filtration systems are designed to consolidate the filtration process by servicing multiple machines from a single filtration unit. These systems efficiently remove contaminants such as metal shavings, tramp oil, and sludge from the coolant, ensuring that it remains clean and effective. By continuously filtering and recirculating coolant, they maintain optimal fluid quality, which in turn enhances tool life, surface finish, and overall machine performance. The centralized approach simplifies maintenance, reduces downtime, and minimizes coolant waste, making it a strategic investment for manufacturers aiming to optimize their production processes. Understanding the operational mechanics of these systems is essential to appreciating their impact on manufacturing efficiency.



Key Advantages of Implementing Centralized Coolant Filtration in Manufacturing Processes

Centralized coolant filtration systems offer several notable benefits for manufacturing operations. extend coolant life by effectively removing contaminants, reducing the frequency of coolant replacement and associated costs.

These systems improve machine reliability and uptime by preventing coolant related issues such as clogging and corrosion. Centralized filtration enhances product quality by maintaining consistent coolant cleanliness, which leads to better surface finishes and tighter tolerances.

From an environmental perspective, reducing coolant waste supports sustainability initiatives and regulatory compliance. Ultimately, adopting centralized filtration aligns with lean manufacturing principles, driving cost savings, operational efficiency, and improved workforce productivity.

MAG TOOLS

Shed Number : B-465, Industrial Estate,
2nd Gate, Gokul Road, HUBLI-580030

PHONE : +91-836-2335990
+91-836-2332297

CELL : +91-9880666722
+91-9343403619
+91-9900970007

EMAIL : info@magtoolsindia.com

WEBSITE : www.magtoolsindia.com/

